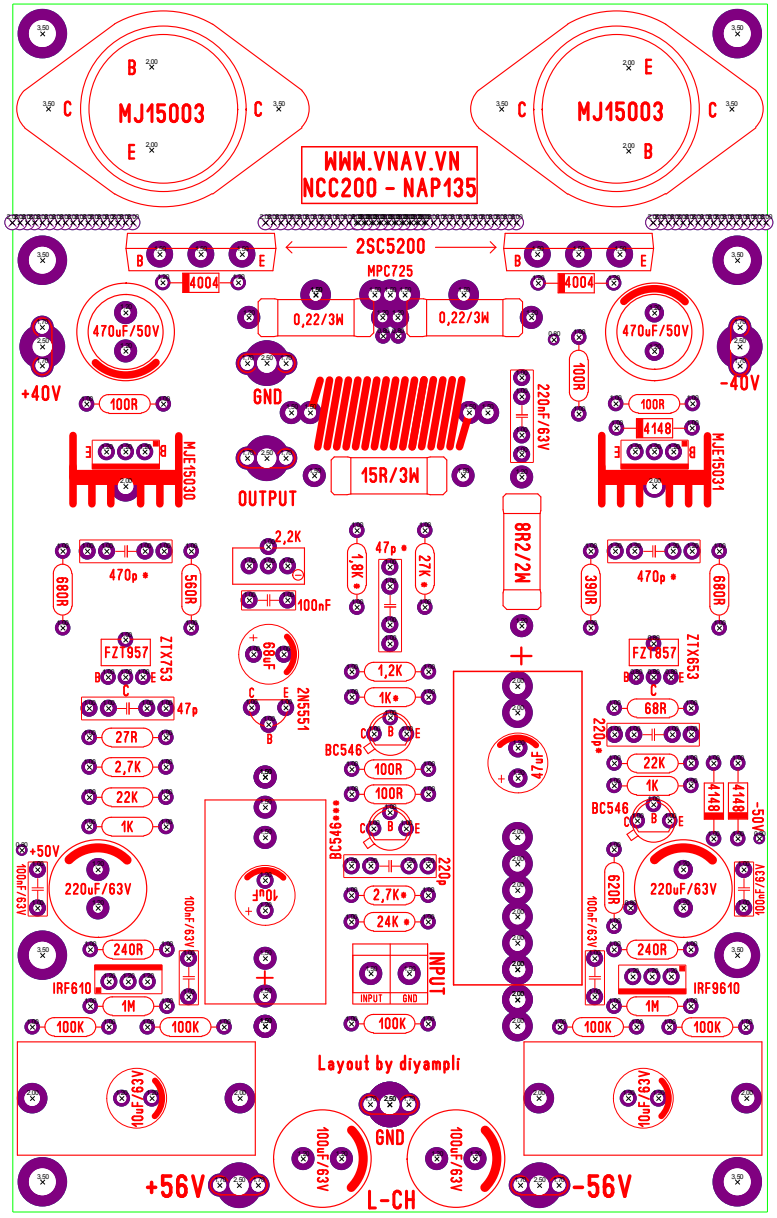
MJ15003
MJ15003
WWW.VNAV.VN
NCC200 - NAP135
2SC5200
MPC725
0,22/3W
0,22/3W
470uF/50V
470uF/50V
+40V
-40V
GND
OUTPUT
15R/3W
220nF/63V
8R2/2W
MJE15030
MJE15031
FZT957
FZT857
ZTX753
ZTX653
2N5551
BC546
BC546
BC546
IRF610
IRF9610
220uF/63V
220uF/63V
+50V
-50V
INPUT
GND
Layout by diyampli
+56V
-56V
L-CH