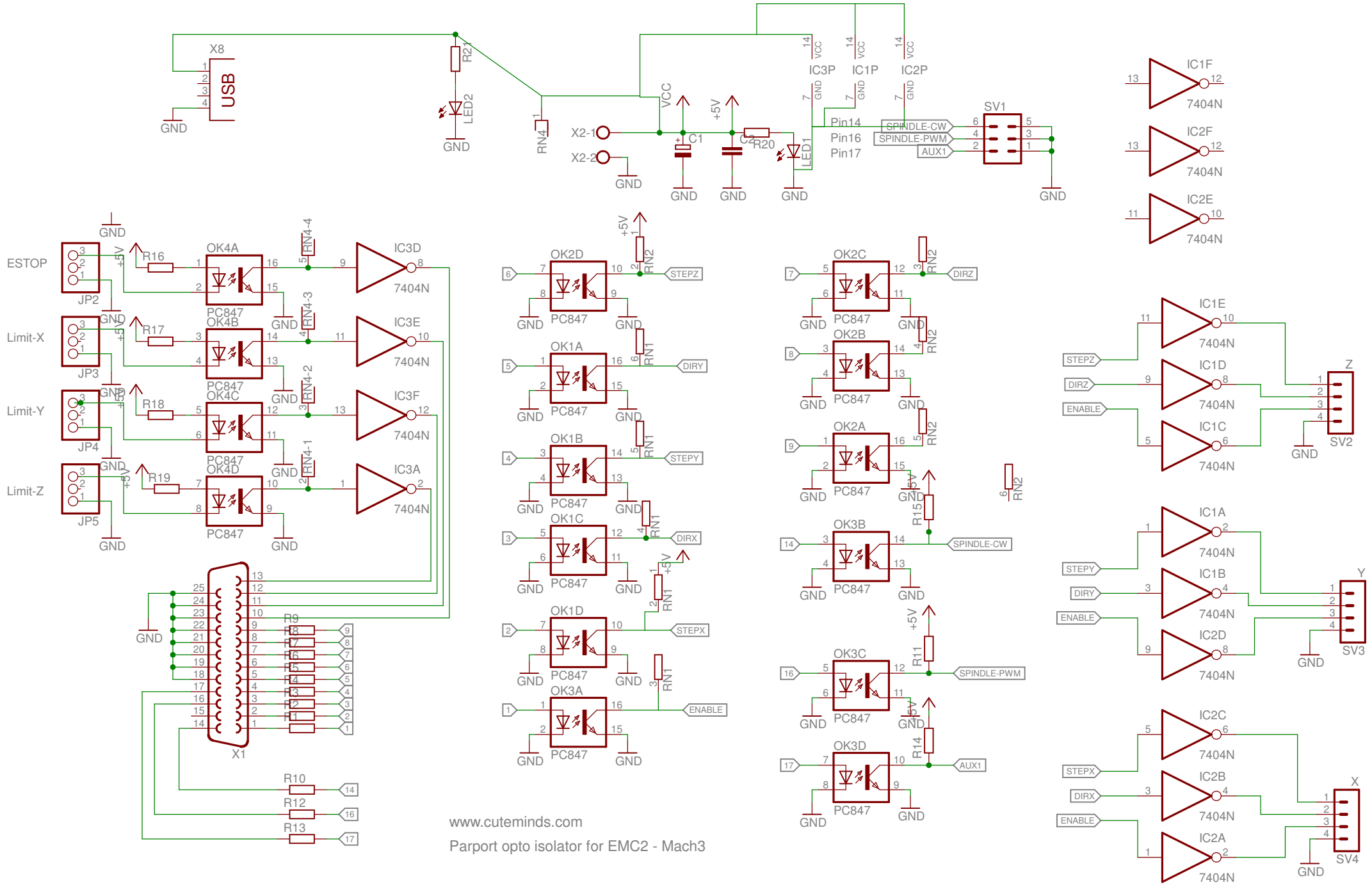

www.cuteminds.com

Parport opto isolator for EMC2 - Mach3