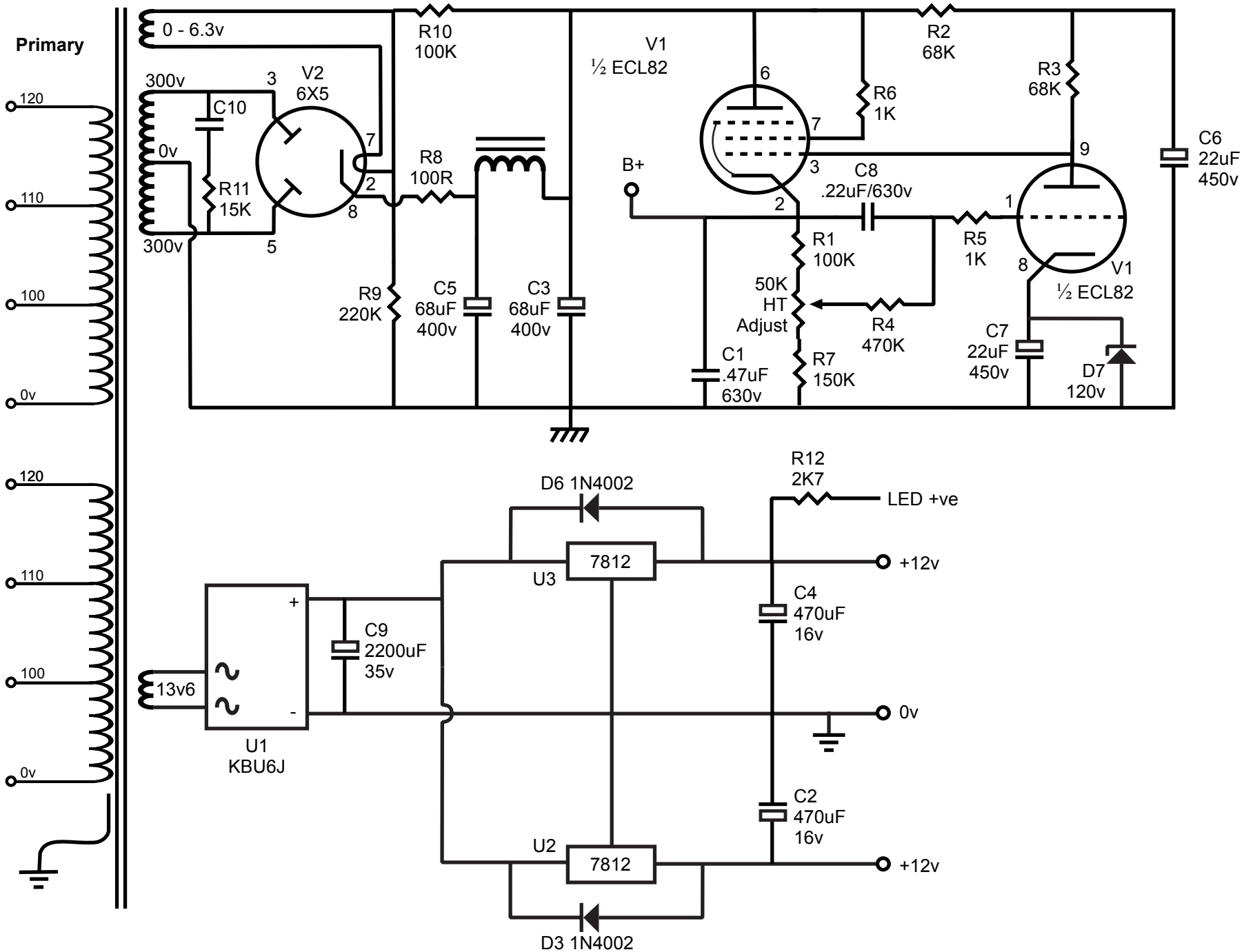Audio Note DAC Kit 2.1 (M2 DAC 6922)	
M2 Power Supply (v2)	Rev. 1.1 - 23rd April 2006