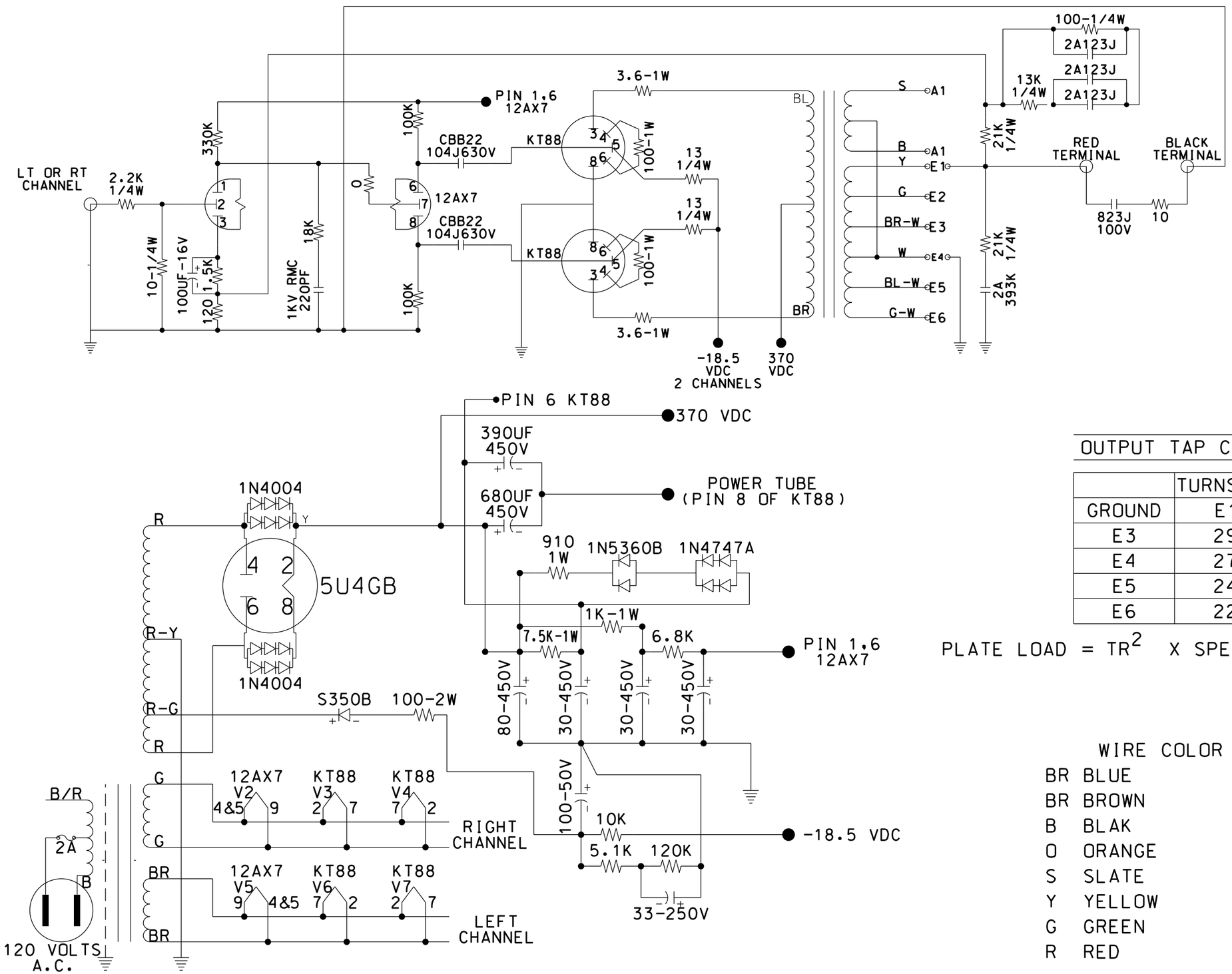

OUTPUT TAP COMBINATIONS

	TURNS RATIO (TR)	
GROUND	E1	E2
E3	29	63
E4	27	54
E5	24	43
E6	22	36

PLATE LOAD = TR^2 X SPEAKER IMPEDANCE

WIRE COLOR CHART

BR	BLUE	W	WHITE
BR	BROWN	G-W	GREEN-WHITE
B	BLAK	BL-W	BLUE-WHITE
O	ORANGE	BR-W	BROWN-WHITE
S	SLATE	R-Y	RED-YELLOW
Y	YELLOW	R-B	RED-BLACK
G	GREEN	R-G	RED-GREEN
R	RED		