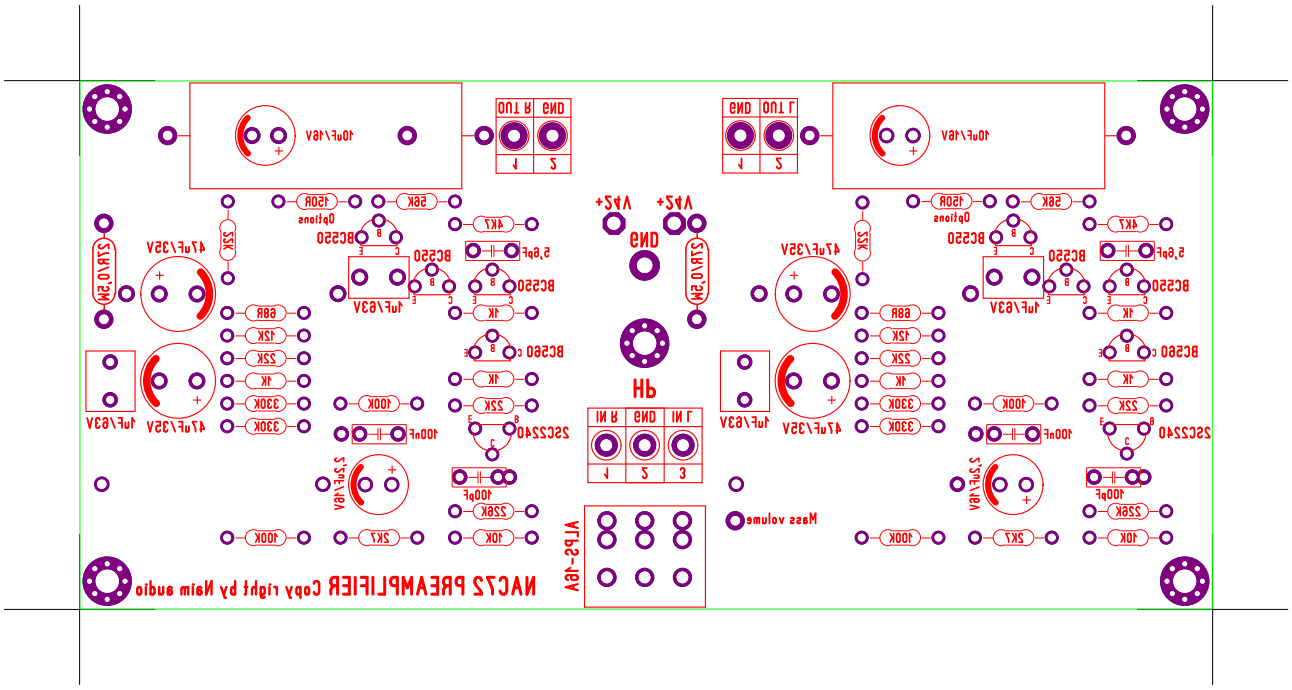
NAC72 PREAMPLIFIER Copy right by Nam audio
AP6-9A
Mass volume
4Ω
GND
+12V
+12V
10uF/16V
10uF/16V
GND
R IN
L IN
GND
R OUT
L OUT
R
L
C
L
R
L
R
L
R