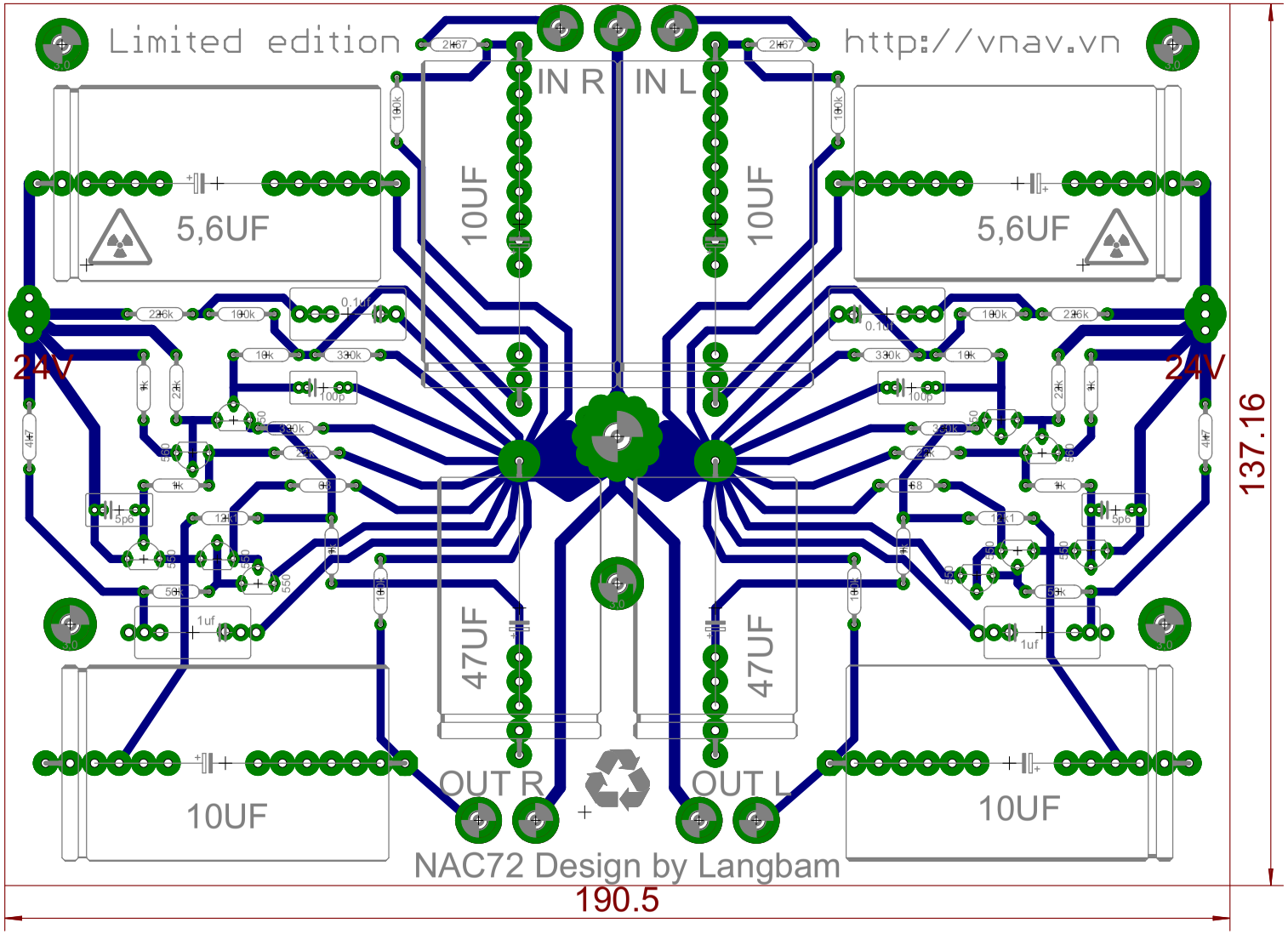
Limited edition
http://vnav.vn
IN R
IN L
10UF
10UF
5,6UF
5,6UF
24V
24V
47UF
47UF
OUT R
OUT L
10UF
10UF
NAC72 Design by Langbam
190.5
137.16