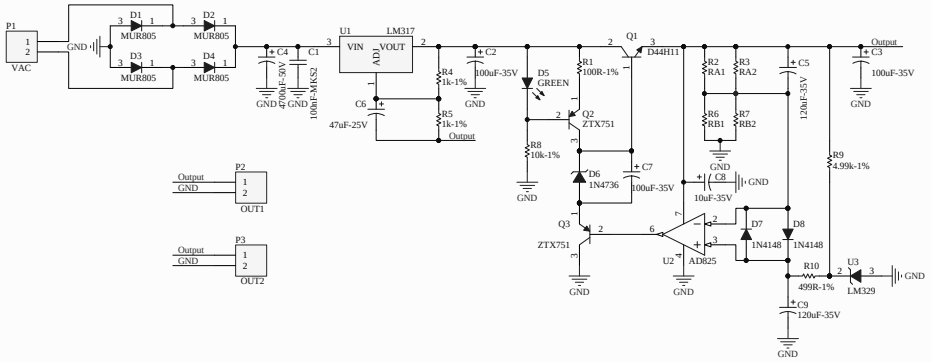

Title		
Size B	Number	Revision
Date: 6/23/2013	Sheet of	
File: D:\My Project\..\Super Regulator.SchDoc	Drawn By:	