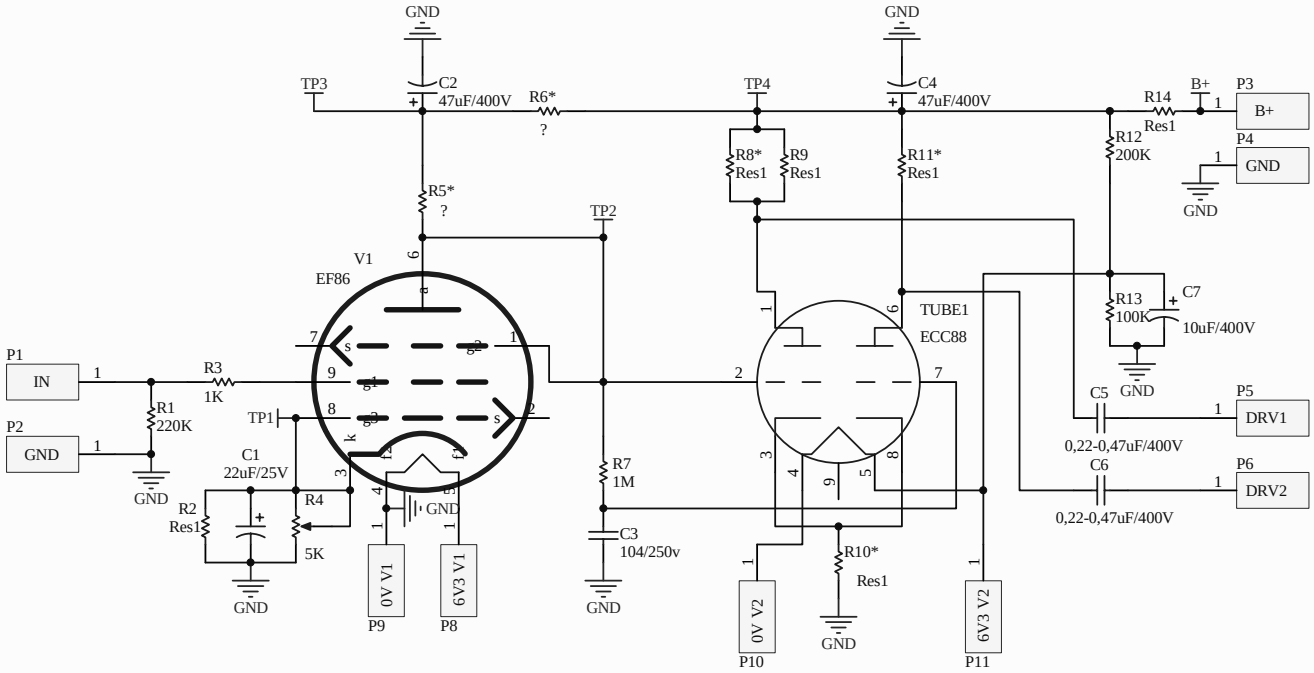

Title		
Size A4	Number	Revision
Date: 9/6/2011		Sheet of
File: E:\Long SXTM\..\EF86 DRV.SchDoc		Drawn By: