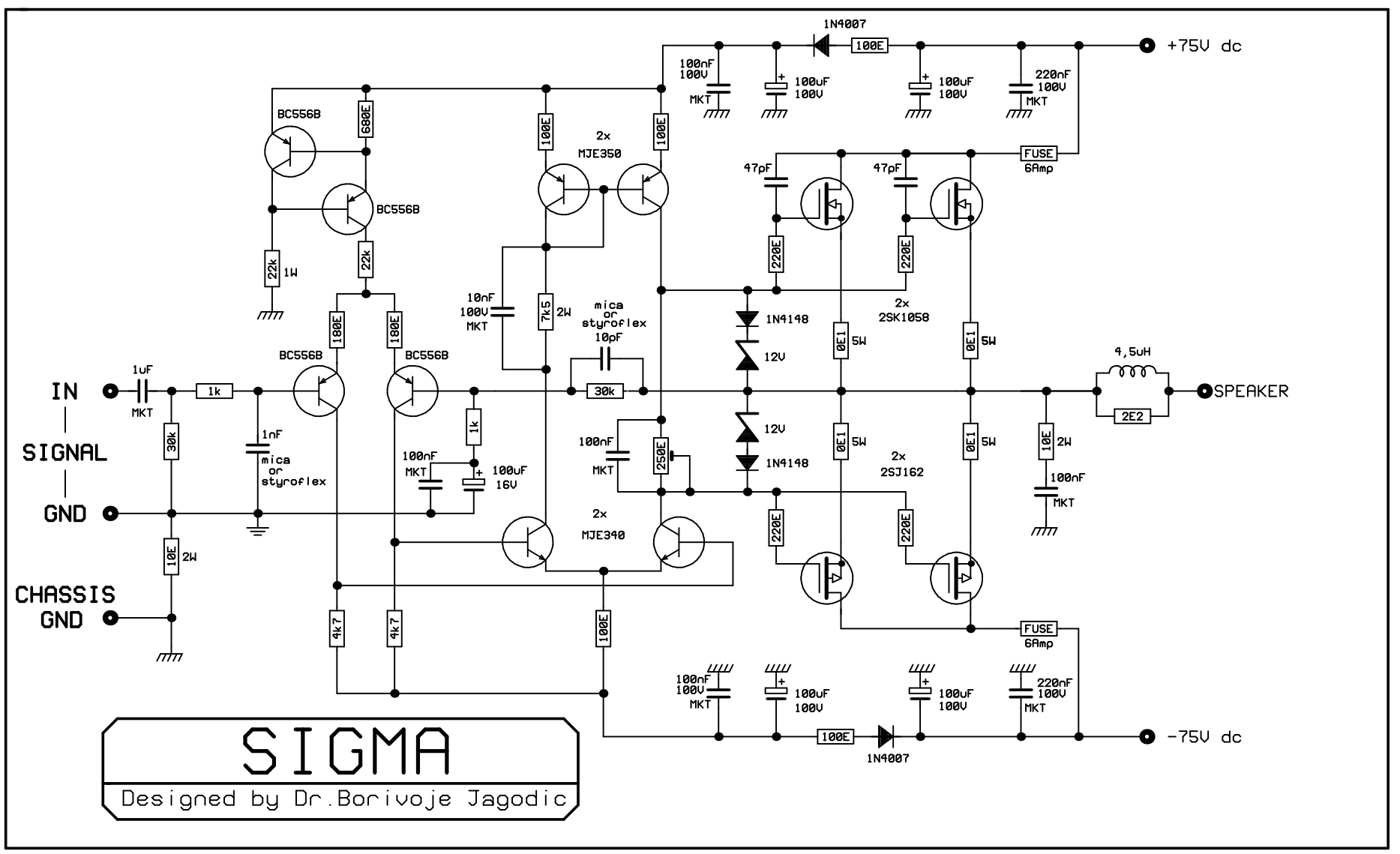


# SIGMA

Designed by Dr.Borivoje Jagodic