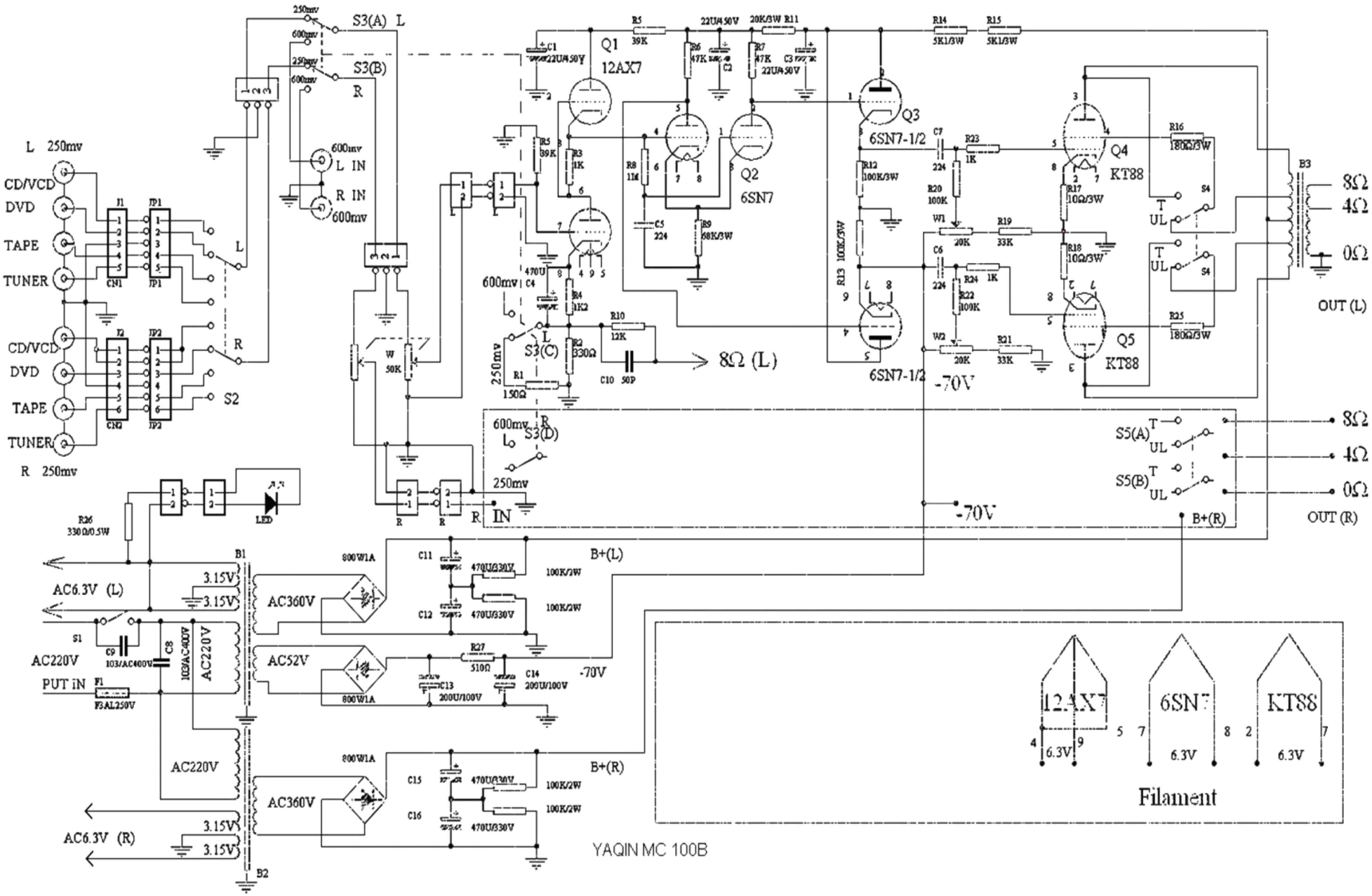
L 250mv
CD/VCD
DVD
TAPE
TUNER
R 250mv
S2
S3(A)
S3(B)
L IN
R IN
600mv
S3(C)
S3(D)
250mv
Q1
12AX7
Q2
6SN7
Q3
6SN7-1/2
Q4
KT88
Q5
KT88
8Ω (L)
-70V
OUT (L)
OUT (R)
8Ω
4Ω
0Ω
S5(A)
S5(B)
B+(R)
B+(L)
AC6.3V (L)
AC6.3V (R)
AC220V
PUT iN
AC360V
AC52V
800W1A
3.15V
LED
12AX7
6SN7
KT88
6.3V
Filament
YAQIN MC 100B